YASKAWA

YRC1000/YRC1000micro OPTIONS INSTRUCTIONS

FOR MUTUAL WAIT FUNCTION

Upon receipt of the product and prior to initial operation, read these instructions thoroughly, and retain for future reference.

MOTOMAN INSTRUCTIONS

MOTOMAN-□□□ INSTRUCTIONS
YRC1000 INSTRUCTIONS
YRC1000 OPERATOR'S MANUAL (GENERAL) (SUBJECT SPECIFIC)
YRC1000 MAINTENANCE MANUAL
YRC1000 ALARM CODES (MAJOR ALARMS) (MINOR ALARMS)

YRC1000micro INSTRUCTIONS
YRC1000micro OPERATOR'S MANUAL
YRC1000micro MAINTENANCE MANUAL
YRC1000micro ALARM CODES (MAJOR ALARMS) (MINOR ALARMS)

Please have the following information available when contacting Yaskawa Customer Support:
- System
- Primary Application
- Software Version *(Located on Programming Pendant by selecting: {Main Menu} - {System Info} - {Version})*
  Robot Serial Number *(Located on robot data plate)*
  Robot Sales Order Number *(Located on controller data plate)*

Part Number: 188357-1CD
Revision: 1

Yaskawa Customer Support
- 24-hour Telephone Number: **(937) 847-3200**
  Use for urgent or emergency needs for technical support, service and/or replacement parts
- Routine Technical Inquiries: *techsupport@motoman.com*
  Allow up to 36 hours for response

MANUAL NO.
HW1486105 ①

DANGER

- This manual explains the mutual wait function of the YRC1000/ YRC1000micro system. Read this manual carefully and be sure to understand its contents before handling the YRC1000/ YRC1000micro. Any matter not described in this manual must be regarded as "prohibited" or "improper".
- General information related to safety are described in "Chapter 1. Safety" of the YRC1000/YRC1000micro INSTRUCTIONS. To ensure correct and safe operation, carefully read "Chapter 1. Safety" of the YRC1000/YRC1000micro INSTRUCTIONS.

CAUTION

- In some drawings in this manual, protective covers or shields are removed to show details. Make sure that all the covers or shields are installed in place before operating this product.
- YASKAWA is not responsible for incidents arising from unauthorized modification of its products. Unauthorized modification voids the product warranty.

NOTICE

- The drawings and photos in this manual are representative examples and differences may exist between them and the delivered product.
- YASKAWA may modify this model without notice when necessary due to product improvements, modifications, or changes in specifications. If such modification is made, the manual number will also be revised.
- If your copy of the manual is damaged or lost, contact a YASKAWA representative to order a new copy. The representatives are listed on the back cover. Be sure to tell the representative the manual number listed on the front cover.

NOTES FOR SAFE OPERATION

Read this manual carefully before installation, operation, maintenance, or inspection of the YRC1000/YRC1000micro.

In this manual, the Notes for Safe Operation are classified as “DANGER”, “WARNING”, “CAUTION”, or “NOTICE”.

DANGER

Indicates an imminently hazardous situation which, if not avoided, will result in death or serious injury. Safety Signs identified by the signal word DANGER should be used sparingly and only for those situations presenting the most serious hazards.

WARNING

Indicates a potentially hazardous situation which, if not avoided, will result in death or serious injury. Hazards identified by the signal word WARNING present a lesser degree of risk of injury or death than those identified by the signal word DANGER.

CAUTION

Indicates a hazardous situation, which if not avoided, could result in minor or moderate injury. It may also be used without the safety alert symbol as an alternative to “NOTICE”.

NOTICE

NOTICE is the preferred signal word to address practices not related to personal injury. The safety alert symbol should not be used with this signal word. As an alternative to “NOTICE”, the word “CAUTION” without the safety alert symbol may be used to indicate a message not related to personal injury.

Even items described as “CAUTION” may result in a serious accident in some situations.
At any rate, be sure to follow these important items.

NOTE

To ensure safe and efficient operation at all times, be sure to follow all instructions, even if not designated as “DANGER”, “WARNING” and “CAUTION".

<YRC1000>

DANGER

- Before operating the manipulator, make sure the servo power is turned OFF by performing the following operations. When the servo power is turned OFF, the SERVO ON LED on the programming pendant is turned OFF.
  - Press the emergency stop button on the front door of the YRC1000, on the programming pendant, or on the external control device, etc.
  - Disconnect the safety plug of the safety fence. (when in the play mode or in the remote mode)

If operation of the manipulator cannot be stopped in an emergency, personal injury and/or equipment damage may result.

Fig. : Emergency Stop Button

- Before releasing the emergency stop, make sure to remove the obstacle or error caused the emergency stop, if any, and then turn the servo power ON.

Failure to observe this instruction may cause unintended movement of the manipulator, which may result in personal injury.

Fig. : Release of Emergency Stop

- Observe the following precautions when performing a teaching operation within the manipulator's operating range:
  - Be sure to perform lockout by putting a lockout device on the safety fence when going into the area enclosed by the safety fence. In addition, the operator of the teaching operation must display the sign that the operation is being performed so that no other person closes the safety fence.
  - View the manipulator from the front whenever possible.
  - Always follow the predetermined operating procedure.
  - Always keep in mind emergency response measures against the manipulator’s unexpected movement toward a person.
  - Ensure a safe place to retreat in case of emergency.

Failure to observe this instruction may cause improper or unintended movement of the manipulator, which may result in personal injury.

- Confirm that no person is present in the manipulator's operating range and that the operator is in a safe location before:
  - Turning ON the YRC1000 power
  - Moving the manipulator by using the programming pendant
  - Running the system in the check mode
  - Performing automatic operations

Personal injury may result if a person enters the manipulator's operating range during operation. Immediately press an emergency stop button whenever there is a problem. The emergency stop buttons are located on the front panel of the YRC1000 and on the right of the programming pendant.

- Read and understand the Explanation of the Warning Labels before operating the manipulator.

<YRC1000micro>

DANGER

- Before operating the manipulator, make sure the servo power is turned OFF by performing the following operations. When the servo power is turned OFF, the SERVO ON LED on the programming pendant is turned OFF.
  - Press the emergency stop buttons on the programming pendant or on the external control device, etc.
  - Disconnect the safety plug of the safety fence. (when in the play mode or in the remote mode)

If operation of the manipulator cannot be stopped in an emergency, personal injury and/or equipment damage may result.

Fig. : Emergency Stop Button

- Before releasing the emergency stop, make sure to remove the obstacle or error caused the emergency stop, if any, and then turn the servo power ON.

Failure to observe this instruction may cause unintended movement of the manipulator, which may result in personal injury.

Fig. : Release of Emergency Stop

- Observe the following precautions when performing a teaching operation within the manipulator's operating range:
  - Be sure to perform lockout by putting a lockout device on the safety fence when going into the area enclosed by the safety fence. In addition, the operator of the teaching operation must display the sign that the operation is being performed so that no other person closes the safety fence.
  - View the manipulator from the front whenever possible.
  - Always follow the predetermined operating procedure.
  - Always keep in mind emergency response measures against the manipulator’s unexpected movement toward a person.
  - Ensure a safe place to retreat in case of emergency.

Failure to observe this instruction may cause improper or unintended movement of the manipulator, which may result in personal injury.

- Confirm that no person is present in the manipulator's operating range and that the operator is in a safe location before:
  - Turning ON the YRC1000micro power
  - Moving the manipulator by using the programming pendant
  - Running the system in the check mode
  - Performing automatic operations

Personal injury may result if a person enters the manipulator's operating range during operation. Immediately press an emergency stop button whenever there is a problem. The emergency stop buttons are located on the upper right of the programming pendant.

- Read and understand the Explanation of the Warning Labels before operating the manipulator.

<YRC1000micro>

DANGER

- In the case of not using the programming pendant, be sure to supply the emergency stop button on the equipment. Then before operating the manipulator, check to be sure that the servo power is turned OFF by pressing the emergency stop button.
  Connect the external emergency stop button to the 4-14 pin and 5-15 pin of the Safety connector (Safety).
- Upon shipment of the YRC1000micro, this signal is connected by a jumper cable in the dummy connector. To use the signal, make sure to supply a new connector, and then input it.

If the signal is input with the jumper cable connected, it does not function, which may result in personal injury or equipment damage.

<YRC1000/YRC1000micro>

WARNING

- Perform the following inspection procedures prior to conducting manipulator teaching. If there is any problem, immediately take necessary steps to solve it, such as maintenance and repair.
  - Check for a problem in manipulator movement.
  - Check for damage to insulation and sheathing of external wires.
- Always return the programming pendant to the hook on the YRC1000/YRC1000micro cabinet after use.

If the programming pendant is left unattended on the manipulator, on a fixture, or on the floor, etc., the Enable Switch may be activated due to surface irregularities of where it is left, and the servo power may be turned ON. In addition, in case the operation of the manipulator starts, the manipulator or the tool may hit the programming pendant left unattended, which may result in personal injury and/or equipment damage.

Definition of Terms Used Often in This Manual <YRC1000>

The MOTOMAN is the YASKAWA industrial robot product.

The MOTOMAN usually consists of the manipulator, the controller, the programming pendant, and supply cables.

In this manual, the equipment is designated as follows:

Equipment	Manual Designation
YRC1000 controller	YRC1000
YRC1000 programming pendant	Programming pendant
Robot	Manipulator
Cable between the manipulator and the controller	Manipulator cable

Definition of Terms Used Often in This Manual <YRC1000micro>

The MOTOMAN is the YASKAWA industrial robot product.

The MOTOMAN usually consists of the manipulator, the YRC1000micro controller, manipulator cables, the YRC1000micro programming pendant (optional), and the YRC1000micro programming pendant dummy connector (optional).

In this manual, the equipment is designated as follows:

Equipment	Manual Designation
YRC1000micro controller	YRC1000micro
YRC1000micro programming pendant	Programming pendant (optional)
Cable between the manipulator and the controller	Manipulator cable
Robot	Manipulator
YRC1000micro programming pendant dummy connector	Programming pendant dummy connector (optional)

Descriptions of the programming pendant keys, buttons, and displays are shown as follows:

Equipment		Manual Designation
Programming Pendant	Character Keys /Symbol Keys	The keys which have characters or symbols printed on them are denoted with [ ]. e.g. [ENTER]
	Axis Keys /Numeric Keys	[Axis Key] and [Numeric Key] are generic names for the keys for axis operation and number input.
	Keys pressed simultaneously	When two keys are to be pressed simultaneously, the keys are shown with a “+” sign between them, e.g. [SHIFT]+[COORD].
	Mode Switch	Mode Switch can select three kinds of modes that are denoted as follows: REMOTE, PLAY or TEACH. (The switch names are denoted as symbols)
	Button	The three buttons on the upper side of the programming pendant are denoted as follows: START, HOLD, or EMERGENCY STOP. (The button names are denoted as symbols)
	Displays	The menu displayed in the programming pendant is denoted with { }. e.g. {JOB}

Description of the Operation Procedure

In the explanation of the operation procedure, the expression “Select • • •” means that the cursor is moved to the object item and [SELECT] is pressed, or that the item is directly selected by touching the screen.

Registered Trademark

In this manual, names of companies, corporations, or products are trademarks, registered trademarks, or brand names for each company or corporation. The indications of (R) and TM are omitted.

1 Function Overview 1-1

2 Connection Settings 2-1

2.1 LAN Port Setting to be Used 2-1

2.2 LAN Interface Setting 2-1

2.3 LAN Connection 2-2

3 Function Setting 3-1

4 Mutual Wait Instruction (RSYNC) 4-1

4.1 Instruction Registration Method 4-1

4.2 Syntax 4-1

4.3 Operation 4-1

5 Suspend 5-1

6 Precautions 6-1

7 Alarms 7-1

1 Function Overview

The mutual wait function synchronizes job execution between different controllers.

When the mutual wait instruction (RSYNC) is executed on different controllers, the controllers to which the instruction first arrives will wait until the mutual wait instruction (RSYNC) is executed on the other controllers.

2 Connection Settings

2.1 LAN Port Setting to be Used

When the mutual wait function is used, the communication by the Ethernet is executed. LAN port settings to be used are required.

Select {SYSTEM} - {SETUP} under the main menu in maintenance mode, select “DETAIL” of “MUTUAL WAIT FUNCTION” in “OPTION FUNCTION” to display the following window, and then select the LAN port to be used. (The LAN port setting is not required for the YRC1000micro because the LAN2 is the only LAN port of the YRC1000micro.)

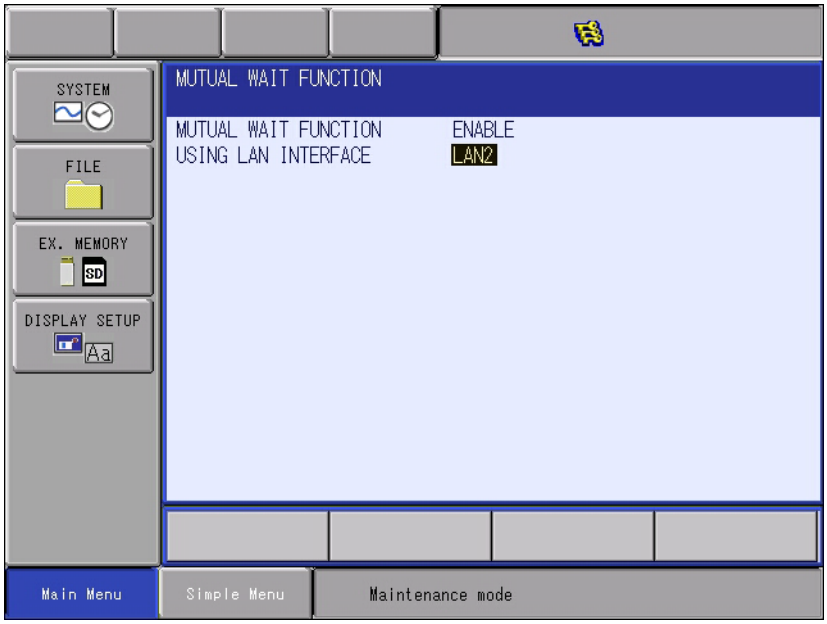

2.2 LAN Interface Setting

When the mutual wait function is used, the communication by the Ethernet is executed. Set the LAN interface by referring to chapter 6.20.3 “Connection with the YRC1000” in “YRC1000 GENERAL OPERATOR’S MANUAL (RE-CSO-A051)” or chapter 6.19.3 “Connection with the YRC1000micro” in “YRC1000micro OPERATOR’S MANUAL (RE-CSO-A058)”.

The IP address set in this chapter is used in the mutual wait function setting.

2.3 LAN Connection

Connect controllers as follows. (Example when four controllers are connected.)

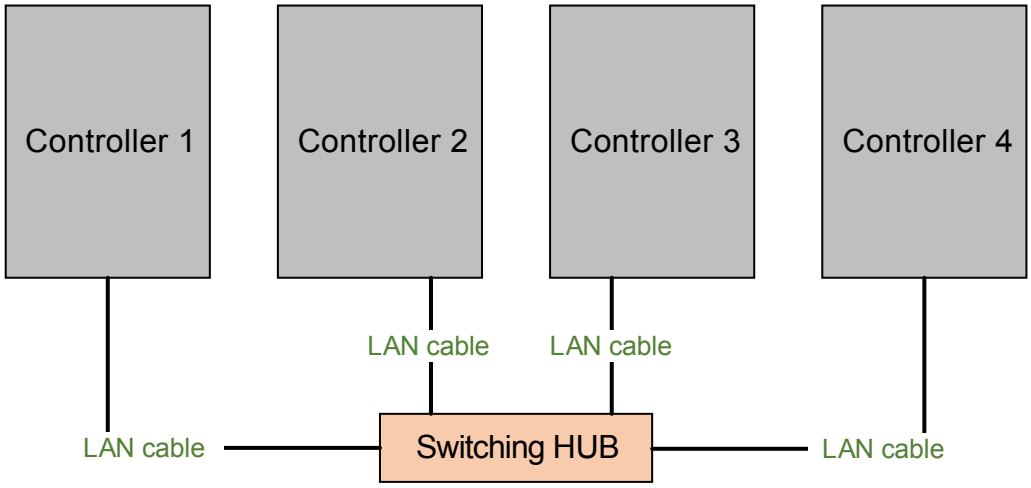

3 Function Setting

This function performs a function setting on the mutual wait function setting window.

Selecting {SETUP} - {MUTUAL WAIT SETUP} under the main menu shows the mutual wait function setting window when the security mode is the management mode or higher at the teach mode.

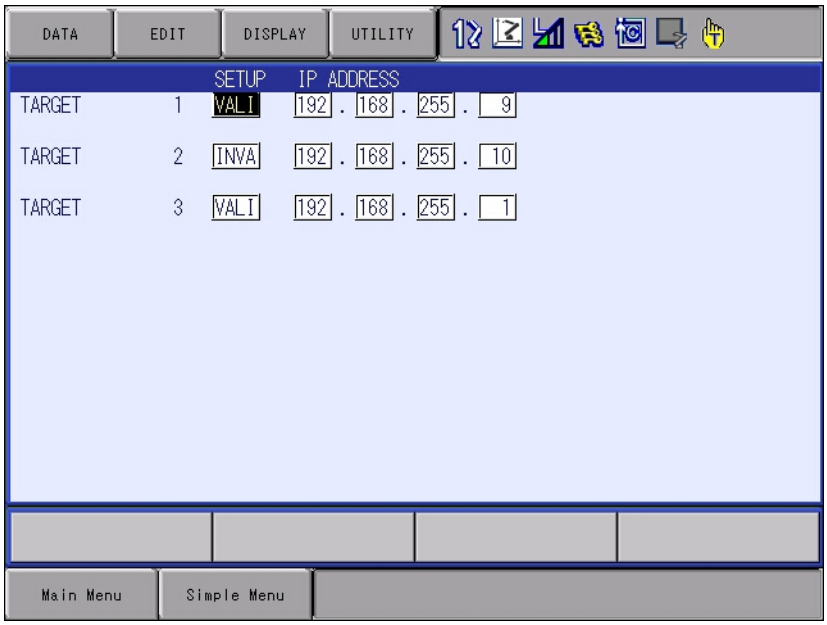

①Mutual wait target

Means the mutual wait controller. Three controllers can be set at most.

②Setting

Selects VALI / INVA of the mutual wait setting with each mutual wait controller.
If “VALI” is set, perform the mutual wait with the target controller when the mutual wait instruction (RSYNC) is executed.
If “INVA” is set, the instruction is immediately complete without performing the mutual wait with the target controller when the mutual wait instruction (RSYNC) is executed.

③Robot IP address

Sets the IP address of the mutual wait controller.

4 Mutual Wait Instruction (RSYNC)

4.1 Instruction Registration Method

The mutual wait instruction (RSYNC) can be selected from “CONTROL” of the instruction list when the language level is “standard” or higher.

4.2 Syntax

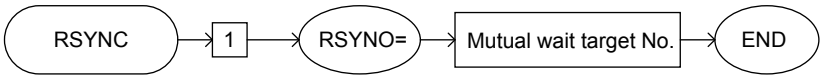

No	Tag	Explanation	Note
1	RSYNO=	Specifies the mutual wait target number.	

4.3 Operation

Synchronizes the execution of the mutual wait instruction (RSYNC) between the controller that executed the mutual wait instruction (RSYNC) and the controller specified as the mutual wait target.

(Example) Examples of settings are as follows.

Mutual wait function setting of the Controller 1;
Mutual wait target 1: Controller 2
Mutual wait target 2: Controller 3
Mutual wait target 3: Controller 4

Mutual wait function setting of the Controller 2;
Mutual wait target 1: Controller 1

Mutual wait function setting of the Controller 3;
Mutual wait target 1: Controller 1

Mutual wait function setting of the Controller 4;
Mutual wait target 1: Controller 1

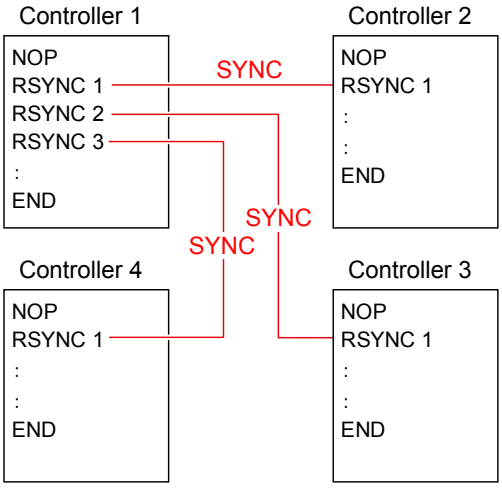

When only one controller executes the mutual wait instruction (RSYNC), the next instruction will not be executed until the mutual wait target controller executes the mutual wait instruction (RSYNC).

5 Suspend

Turn ON controller special input signal #40563 and the controller can be temporarily suspended from being a mutual wait target.

If the suspended controller was a mutual wait target, controllers on which the mutual wait instruction (RSYNC) was executed will terminate the instruction promptly and execute the next instruction.

An alarm will occur if the mutual wait instruction (RSYNC) is executed on a suspended controller.

*In order to use suspend, it must be configured before the job is executed.

6 Precautions

Note the following precautions when using the mutual wait function.

- Once the mutual wait instruction (RSYNC) is executed, the mutual wait target controllers will be notified of the execution state. The execution state is not canceled even if execution is stopped, such as due to a hold.
  For this reason, when a manipulator is stopped due to a hold after the mutual wait instruction (RSYNC) is executed on one controller and the mutual wait instruction (RSYNC) is executed on a mutual wait target controller, the execution conditions are assumed to have been satisfied and the next instruction will be executed. (Refer to Example 1.)
  However, if a mutual wait function setting is changed or the job is edited (an operation that turns ON special output signal #50075, such as moving the cursor or selecting a job), the mutual wait instruction (RSYNC) execution state sent to the mutual wait target controller will be canceled. (Refer to Example 2.)

Example 1: Job Execution Stopped Due to a Hold after Mutual Wait Instruction (RSYC) Execution

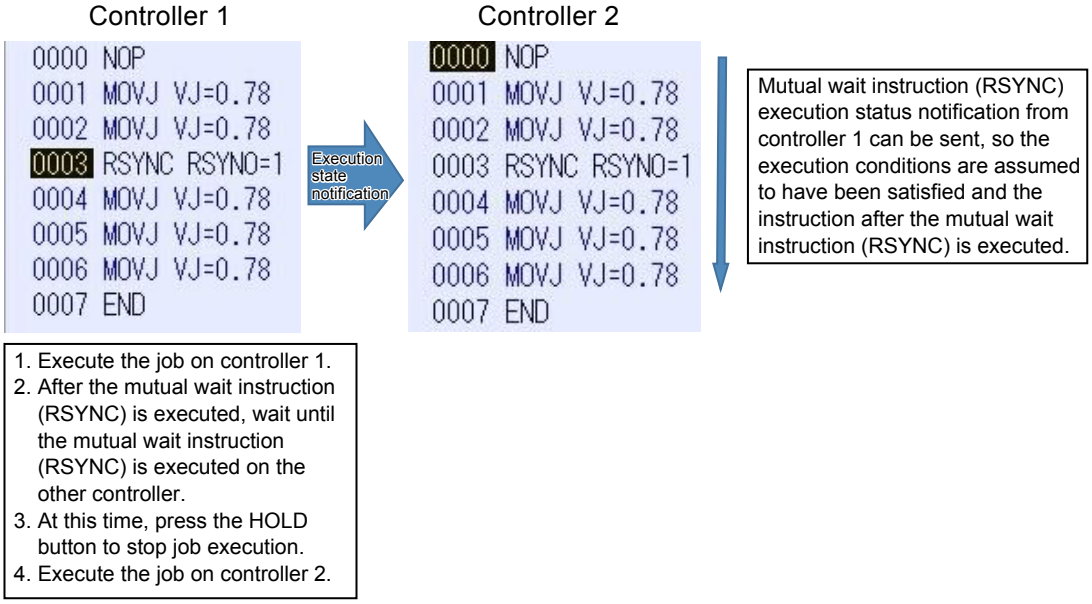

Example 2: Job Execution Stopped Due to a Hold after Mutual Wait Instruction (RSYC) Execution and Job Was Edited (Operation That Turns ON Special Output Signal #50075 (E.g., Cursor Movement or Job Selection))

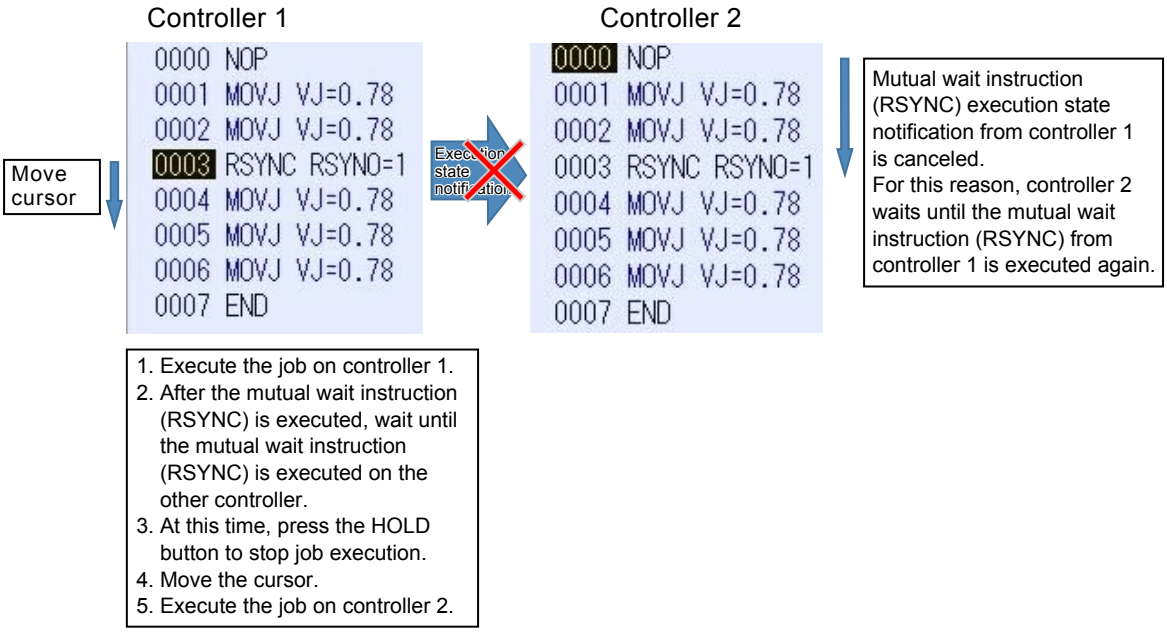

- When the independent control function is enabled, the mutual wait instruction (RSYNC) cannot be executed by simultaneously specifying the same mutual wait target, such as RSYNC 1 in subtask 1 and RSYNC 1 in subtask 2.

7 Alarms

The following tables gives alarms that occur with the mutual wait function.

Alarm No. Alarm Name	Details	Subcode	Actions
Alarm 4084 MUTUAL WAIT ERROR	An error was detected in the mutual wait function.	0000_0000_0000_0001: No response from a mutual wait controller.	Check the contents of the mutual wait configuration file. Check the network settings for the mutual wait controllers. Check the communications connections with mutual wait controllers.
		0000_0000_0000_0010: A communications error occurred with a mutual wait controller when the RSYNC instruction was being executed.	Check the communications connections with mutual wait controllers.
		0000_0000_0000_0110: A mutual wait setting was changed on a mutual wait controller when the RSYNC instruction was being executed.	Check if a mutual wait function setting was changed on the mutual wait controller when the RSYNC instruction was being executed or if the controller was suspended (special input signal #40563 = ON).
		0000_0000_0001_0000: RSYNC instruction mutual wait target number error.	Check the mutual wait target number in the RSYNC instruction.
		0000_0000_0010_0000: A duplicate RSYNC instruction was executed.	In a job with multiple tasks, correct the job so that the RSYNC instruction is not executed simultaneously.
		0000_0000_0101_0000: Invalid notification was received from a mutual wait controller.	Reset the alarm and if the alarm occurs again, save CMOS.BIN and notify your YASKAWA representative of the status (e.g., the operation procedure) when the alarm occurred.
		0000_0000_0111_0000: The RSYNC instruction was executed on a robot controller that was suspended.	Check if the RSYNC instruction was executed on a robot controller that was suspended (special input signal #40563 = ON).

If the alarm occurs again after taking the actions in the above table, save CMOS.BIN and notify your YASKAWA representative of the status (e.g., the operation procedure) when the alarm occurred.

YRC1000/YRC1000micro OPTIONS
INSTRUCTIONS

FOR MUTUAL WAIT FUNCTION

©2019 YASKAWA ELECTRIC CORPORATION
Published by YASKAWA

YASKAWA

YASKAWA ELECTRIC CORPORATION

July 2019 19-05

MANUAL NO.
HW1486105 ①